CATEGORY	DESCRIPTION	P/N #
CONNECTOR	DVI(24+0) Female, V/A, T/H	DV240F-24710-XXXX

REV.	ECN NO	DESCRIPTION	REVISED	DATE
A01	————	New Release	Luguan	2009.08.07

SPECIFICATION:
1. Current Rating: 1.5A MIN.
2. Contact Resistance: 40mΩ MAX.
3. Insulation Resistance: 1000MΩ MIN.
4. Dielectric Withstanding Voltage: 500V AC
5. Insertion Force: 4.5Kgf MAX.
6. Extraction Force: 1.0 Kgf MIN.
7. Durability: 100 Cycles
8. Operation Temperature: −20°C~85°C

PART NO.:
DV240F-24710-XXXX

XX	Screw Type
01	無螺絲
02	附螺絲
03	鎖螺絲

See Color Scheme

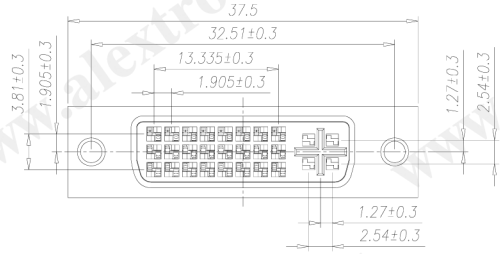

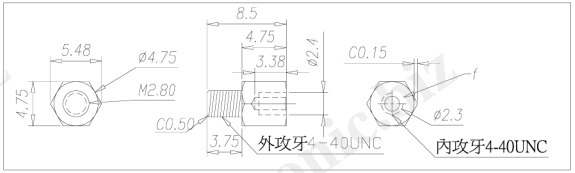

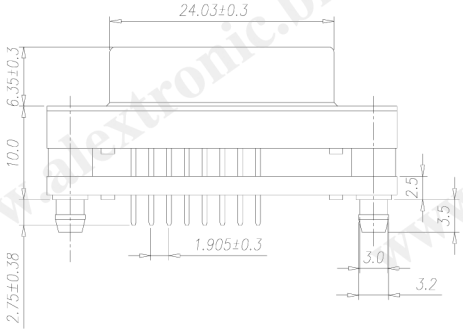

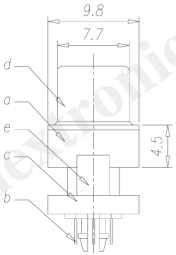

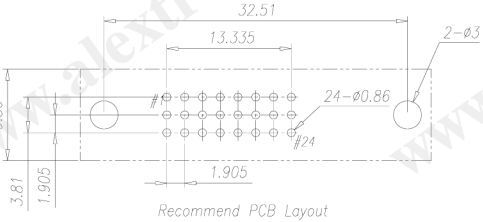

Recommend PCB Layout
(Jack Top View)
Tolerance: ±0.05mm
Recommend PCB Thickness: 1.6mm

Color Scheme	
XX	Housing
00	Black
09	White

NO.	PART NAME	Q'TY	MATERIAL	PLATING & COLOR	Remark
f	Screw	2	Copper Alloy	Ni Plating	
e	Rivet	2	Copper Alloy	Ni Plating	
d	Shell	1	SPCC, T=0.5mm	Ni Plating	
c	Cover	1	PA UL94V-0	See Color Scheme	
b	Terminal #1~#24	24	Brass, T=0.25	Gold Flash Plating	
a	Housing	1	PA UL94V-0	See Color Scheme	

UNLESS OTHERWISE SPECIFED TOLERANCES

DECIMALS: X :±0.5, X.X :±0.3, X.XX :±0.2
ANGLES: X :±2°, X.X :±1°

Product Drawing
ALEXTRONIC

SCALE:free	UNIT: mm	DWG.NO:
SIZE: A3	PAGE:1 OF 1	REV:A01
APPROVED BY	CHECKED BY	PREPARED BY
WYX	Pengjie	Luguan

WI-061-629

CUSTOMER COPY

www.alextronic.biz